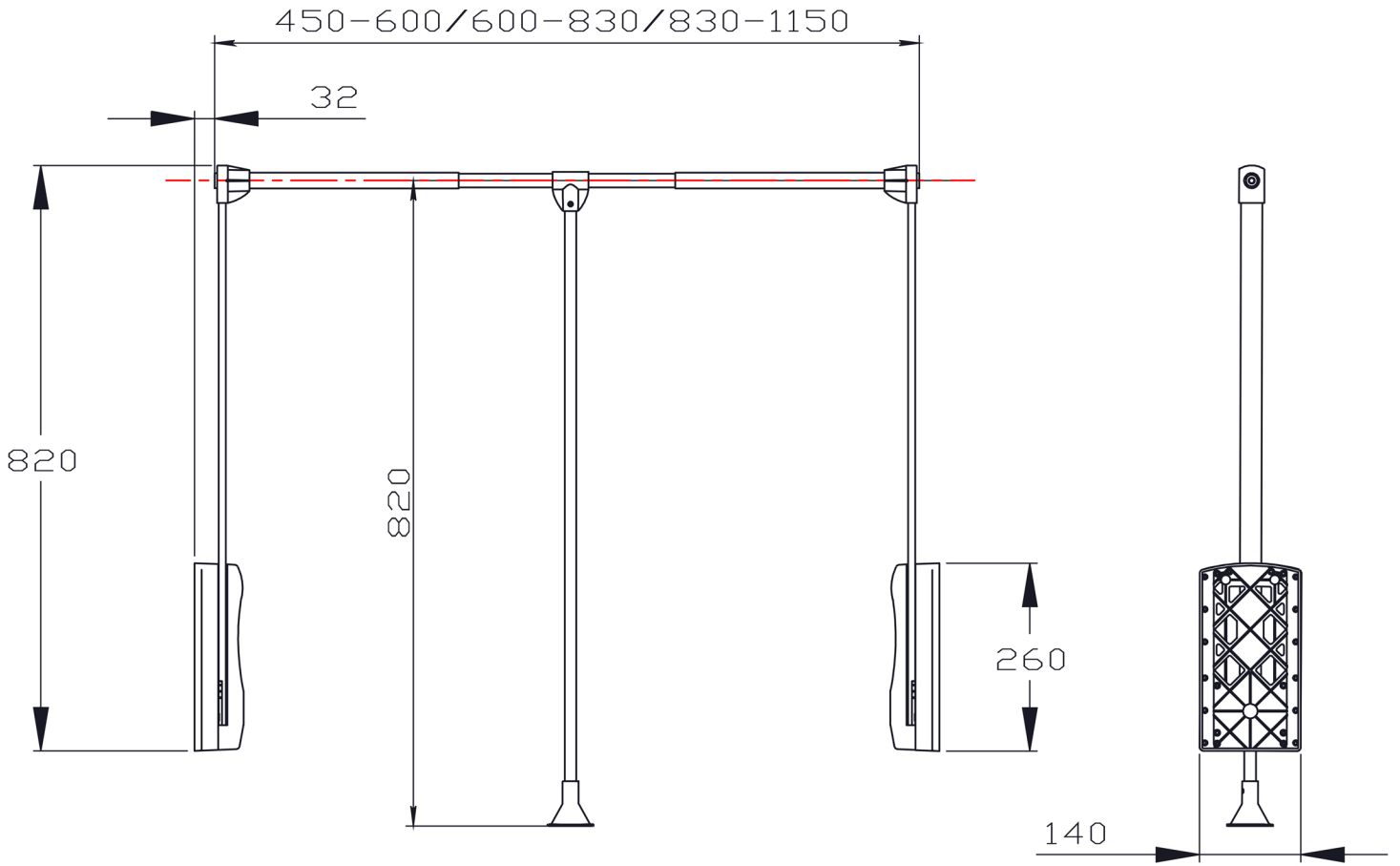
450-600/600-830/830-1150
32
820
820
260
140